INSTALLATION & MAINTENANCE MANUAL

OP7N / OP9N / OP94 / OP9RCD

GENERAL INSTRUCTIONS

These instructions should be read carefully and retained after installation by the end user for future reference and maintenance.
These instructions should be used to aid installation of the following product:
OP7N / OP9N / OP94 / OP9RCD

SAFETY

- This product must be installed in accordance with the latest edition of the IEE Wiring Regulations (BS7671) and current Building Regulations. If in any doubt, consult aqualified electrician
- Please isolate mains prior to installation or maintenance
- Check the total load on the circuit (including when this product is fitted) does not exceed the rating of the circuit cable, fuse, or circuit breaker
- Please note the IP (Ingress Protection) rating of this product when deciding the location for installation
- This product is Class I and must be earthed
- This product is IP66 rated

INSTALLATION

Note: the unit should be fixed to a rigid flat surface as unevenness could cause damage to the product or affect operation

- Provide power to the required point of installation (refer to BS7671 for correct cabling methods)
- Remove the front assembly from the backbox with an aid of a screwdriver and turn to the unlocked padlock symbol on the casing and carefully lift off the gasket. Drill the required number of fixing holes in the backbox (see Fig. 1)
- Using the backbox as a template, mark the location for, and drill the fixing holes ensuring not to infringe with any gas/water pipes or electrical cables

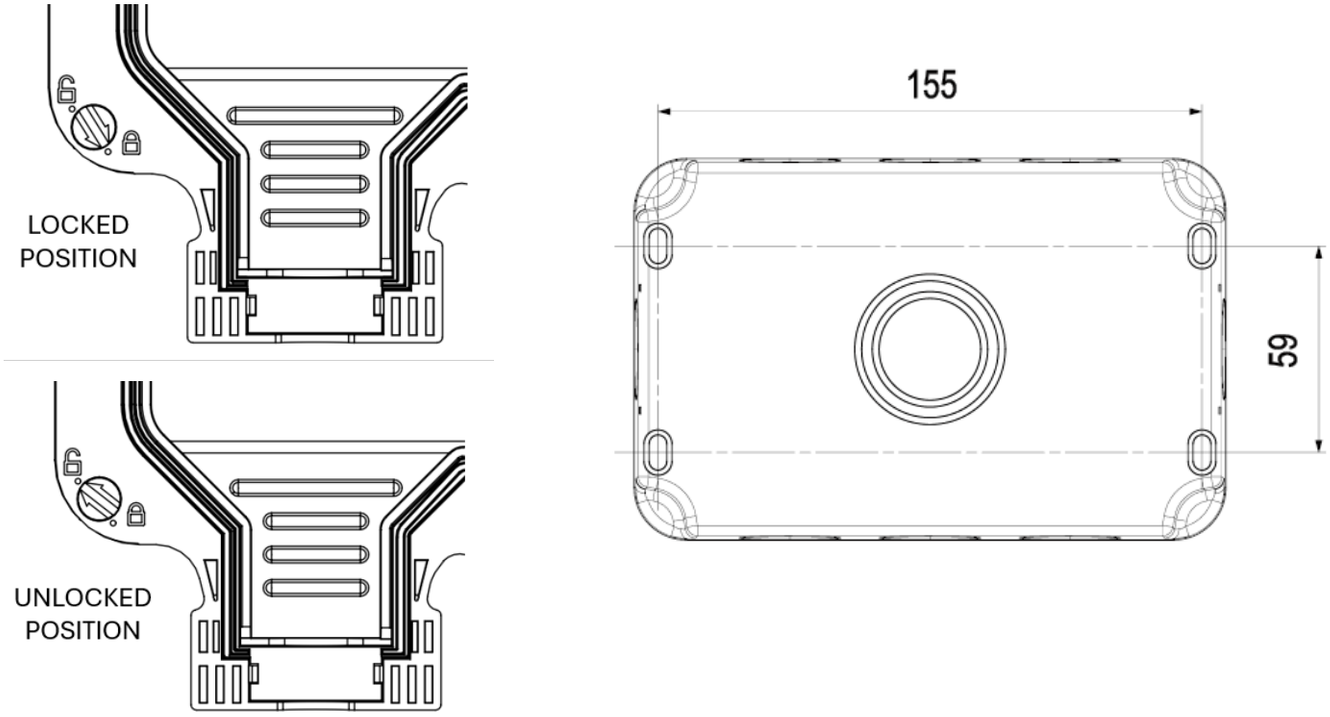

Fig. 1

- The backbox has drain hole drilling guides marked (see Fig. 2). Drilling a drain hole is advised if the unit is installed in a location subject to temperature fluctuations where build-up of condensation may occur. It is not advised if the unit will be subject to high pressure jets, as drilling a drain hole will reduce the IP rating. A 3-5mm hole should be drilled at the bottom back edge of the enclosure where marked. If wiring in conduit to the bottom entry, then the drain hole should be drilled at the lowest point of the conduit run not in the backbox

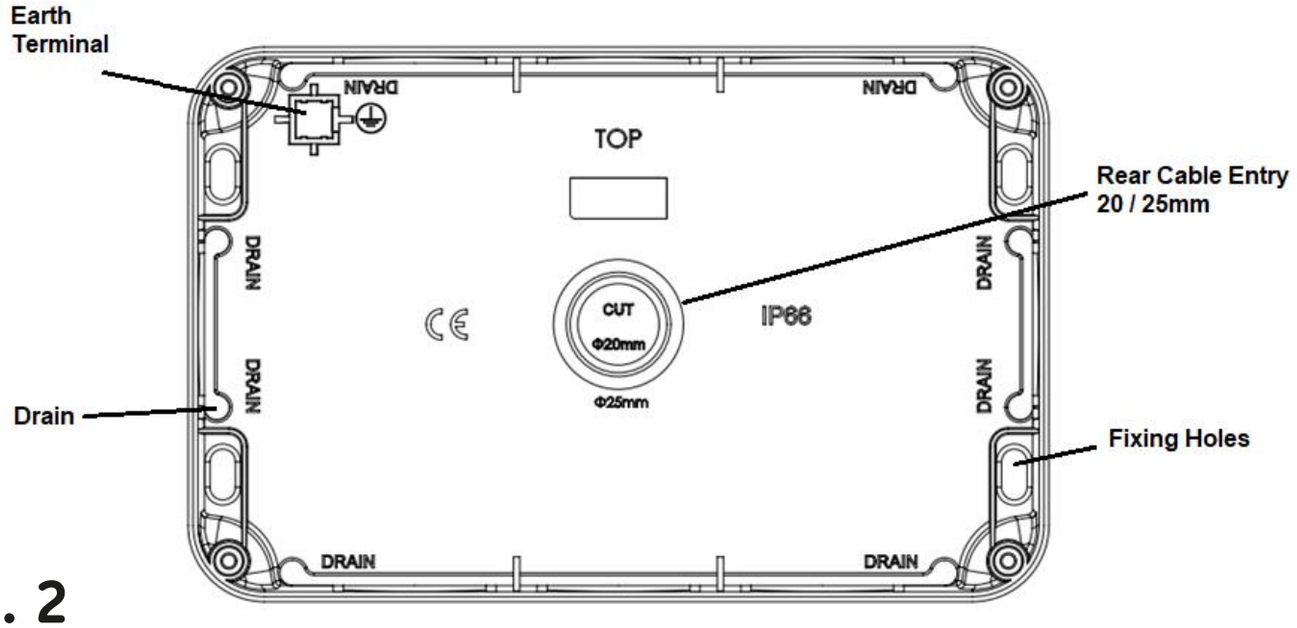

Fig. 2

- Remove one or more of the pre-fitted blank plugs as required by pushing out from the inside and install a suitable IP rated gland or adaptor (not supplied). For rear entry, cut or drill a 20/25mm hole where marked and install a suitable IP rated grommet (not supplied). Unused cable entries must have the blank plugs fitted
- Feed the mains cable into the unit and secure the base plate to the surface. The fixing holes are slotted to allow some rotational adjustment
- Replace the gasket onto the backbox, then wire as shown in Fig. 3 for OP7N/OP9N/OP94

Fig. 4 for OPRCD ensuring that correct polarity is observed: L - Live (brown), E - Earth (green/yellow), N - Neutral (blue)

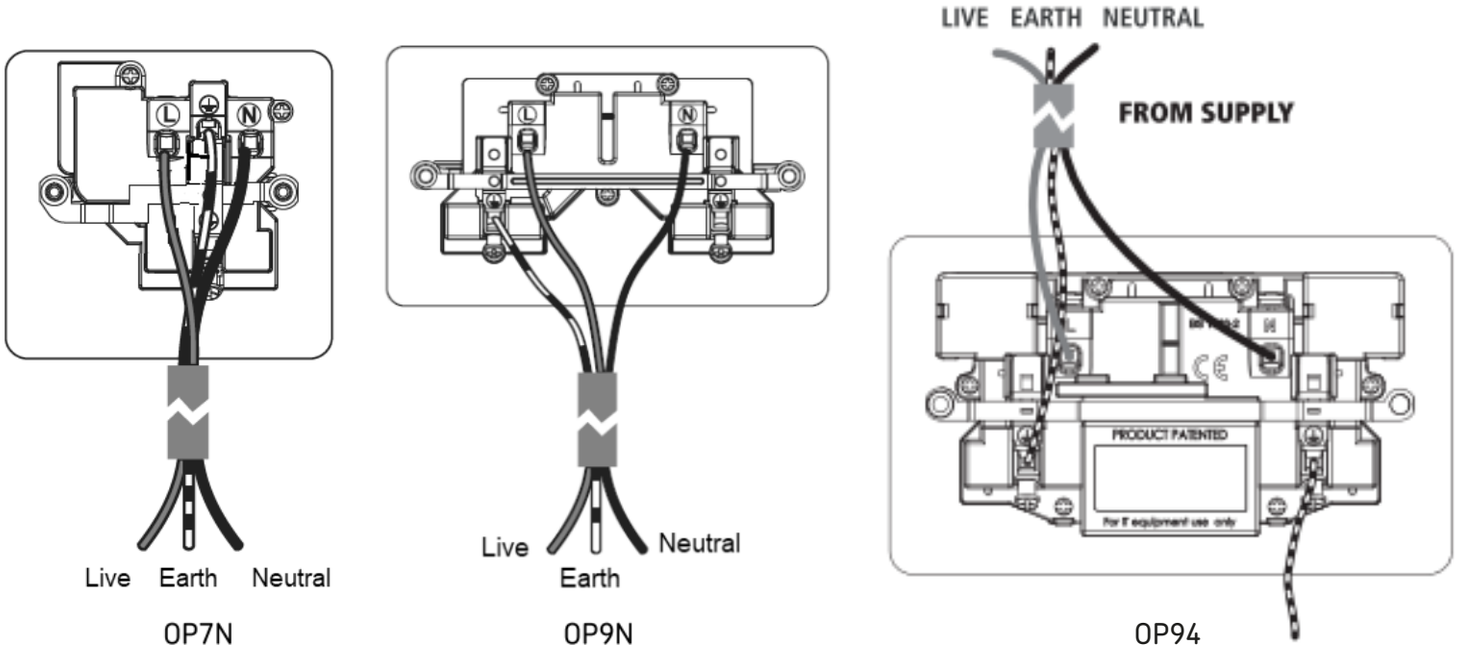

Fig. 3

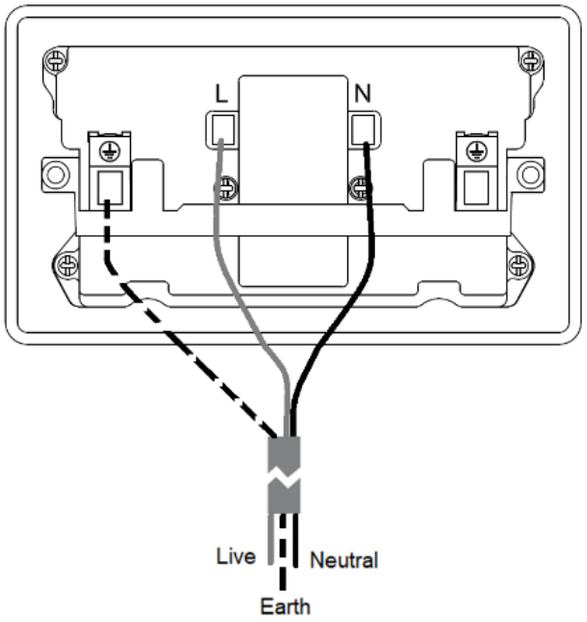

Fig. 4

- An earth connection must be made to the earth terminal of the socket. Use green/yellow sleeving on earth conductors that are not insulated. The earth terminal in the backbox is provided for convenience and does not need to be connected
- Check all electrical connections are secure with no loose strands of cable
- Ensuring the gasket does not become damaged or pinched, fit the socket assembly onto the backbox, taking care not to compress, damage or trap any cables, and secure with the screws provided - do not overtighten
- Replace front assembly to back box and secure by returning the screws to the LOCKED position
- Switch on and check for correct operation
- For security, and to prevent unwanted tampering with the product, a lug feature with a 6mm hole is provided to accept a padlock or similar locking security device (not included)

RCD TEST PROCEDURE

Press the green RESET button to switch on the supply. The red indicator should appear.
To test that the RCD is operating correctly, press the yellow TEST button. The red indicator should turn green, this will disconnect the load. To restore power, press the green RESET button. The red indicator should reappear.
If the RCD should trip due to a fault, the RESET button can be pressed after the fault is rectified. If the RCD will not reset, remove any connected loads and check for faults, water ingress or damage.
Following a power cut the RCD will automatically reset itself and does not need manually resetting. Care should be taken to avoid connected loads powering up without warning.
The TEST button should be pressed at regular intervals to check the RCD is functioning correctly. We recommend testing every 6 months. If the red indicator does not turn green when the TEST button is pressed, do not use.

WARNING

To ensure continued safe and proper weatherproof operation, the unit must not be left with the cover raised open or the catch left unlocked.
This product must be disconnected from the circuit if subjected to any high voltage or insulation resistance testing. Irreparable damage will occur if this instruction is not followed1

GENERAL

This product should be recycled in the correct manner when it reaches the end of its life. Check local authorities for where facilities exist.
To clean the external surfaces, securely close the cover and use a damp cloth with a mild solution of detergent and warm water only, do not use aggressive cleaning products or solvents which may damage the product. If it is necessary to clean inside the cover, use a soft dry cloth only.
Do not use any source of high-pressure washers to maintain or clean this product.

WARRANTY

This product has a warranty of 2 years from date of purchase. Failure to install this product in accordance with the current edition of the IEE Wiring Regulations (BS7671), improper use, or removal of the batch code will invalidate the warranty. If this product should fail within its warranty period, it should be returned to the place of purchase for a free of charge replacement. ML Accessories does not accept responsibility for any installation costs associated with the replacement product. Your statutory rights are not affected. ML Accessories reserve the right to alter product specification without prior notice.

SUPPLIED BY:

(UK) MANUFACTURER
ML ACCESSORIES LTD, UNIT E CHILTERN PARK,
BOSCOMBE ROAD, DUNSTABLE LU5 4LT,
WWW.MLACCESSORIES.CO.UK

(EU) AUTHORISED REPRESENTATIVE
SLV LIGHTING GROUP,
DAIMLERSTRASSE 21-23,
52531 ÜBACH-PALENBERG, GERMANY
EMAIL: EPREL@GROUP.SLV.COM

MADE IN CHINA

230V 50Hz **IP66**

ML ACCESSORIES LTD

LIGHTING INDUSTRY ASSOCIATION

UK CA

11

JBOCT24_V1