sensio
furniture lighting solutions

Flex 19mm + Polar Pro X

SE070007NDP0

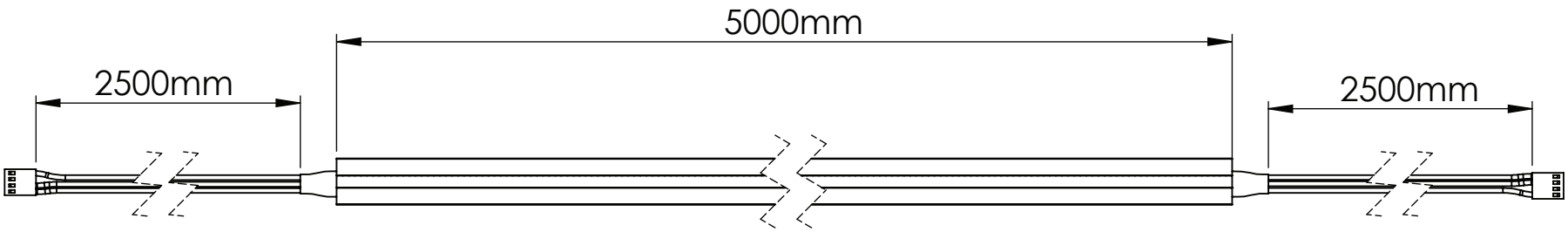

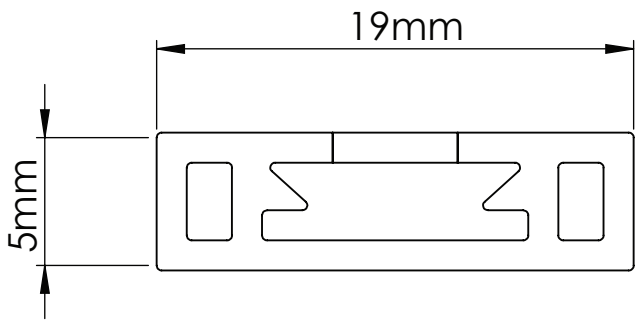

IMPORTANT INFORMATION ALL measurements in this document are set in MM (Millimetres)